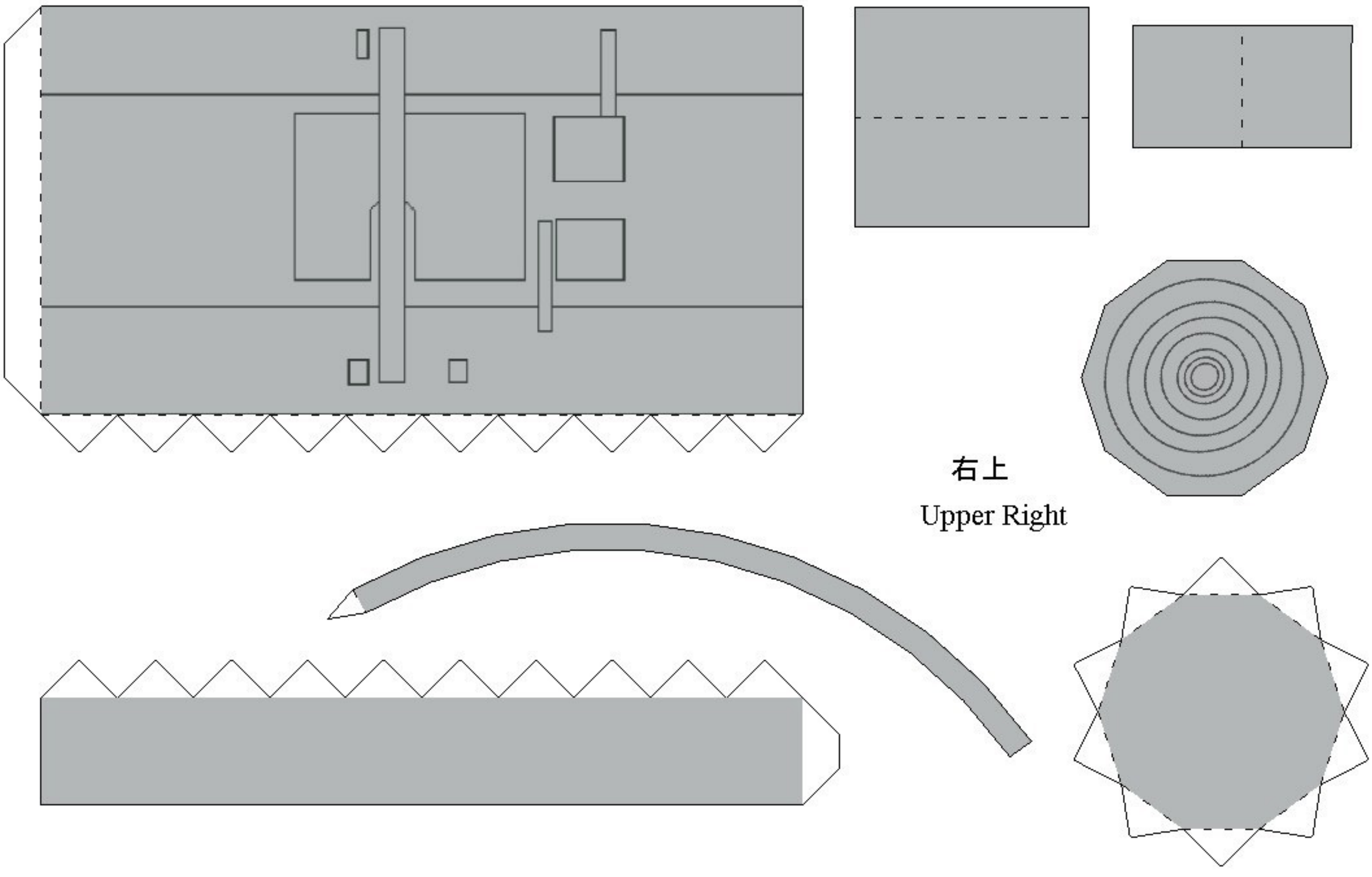

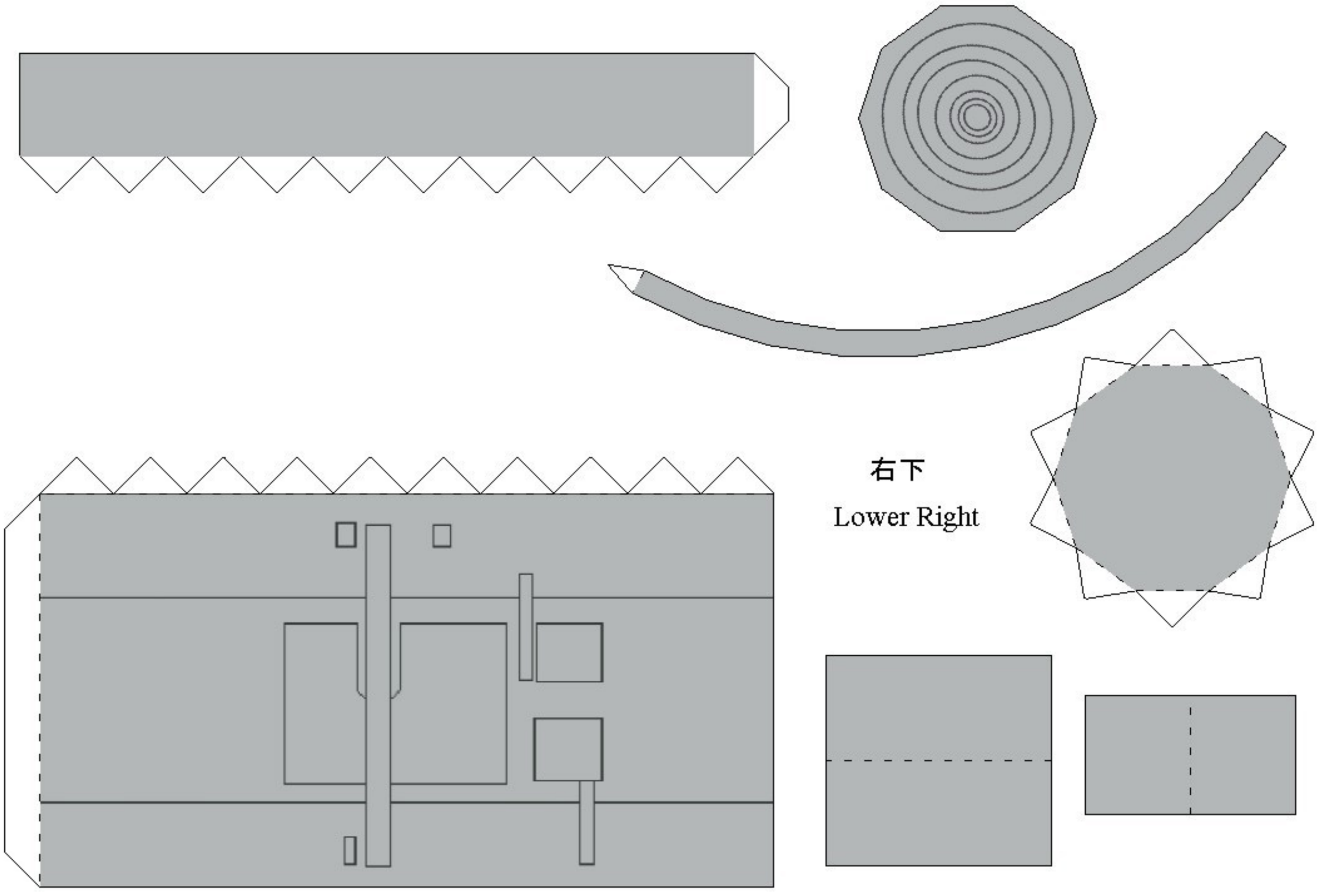

Designed by Tetsuji MORITA