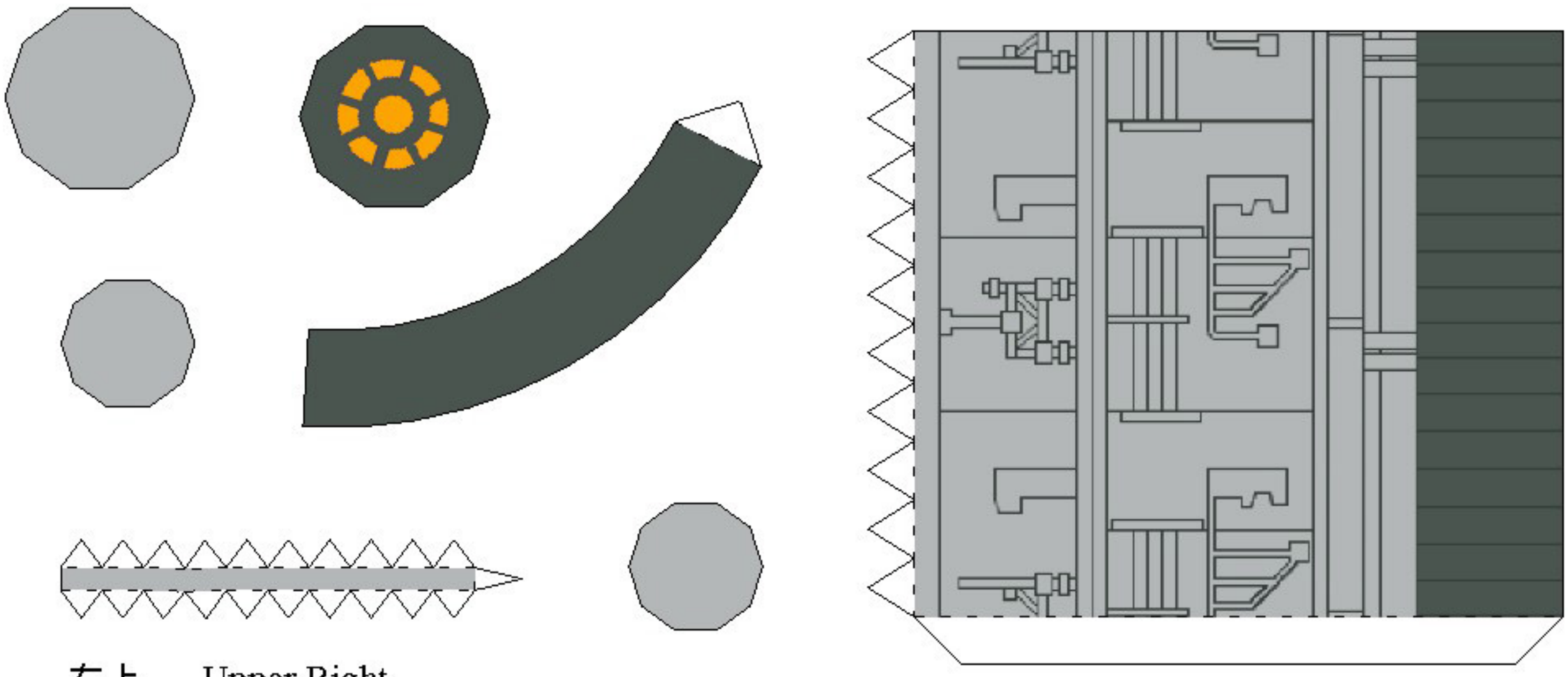

右上　Upper Right
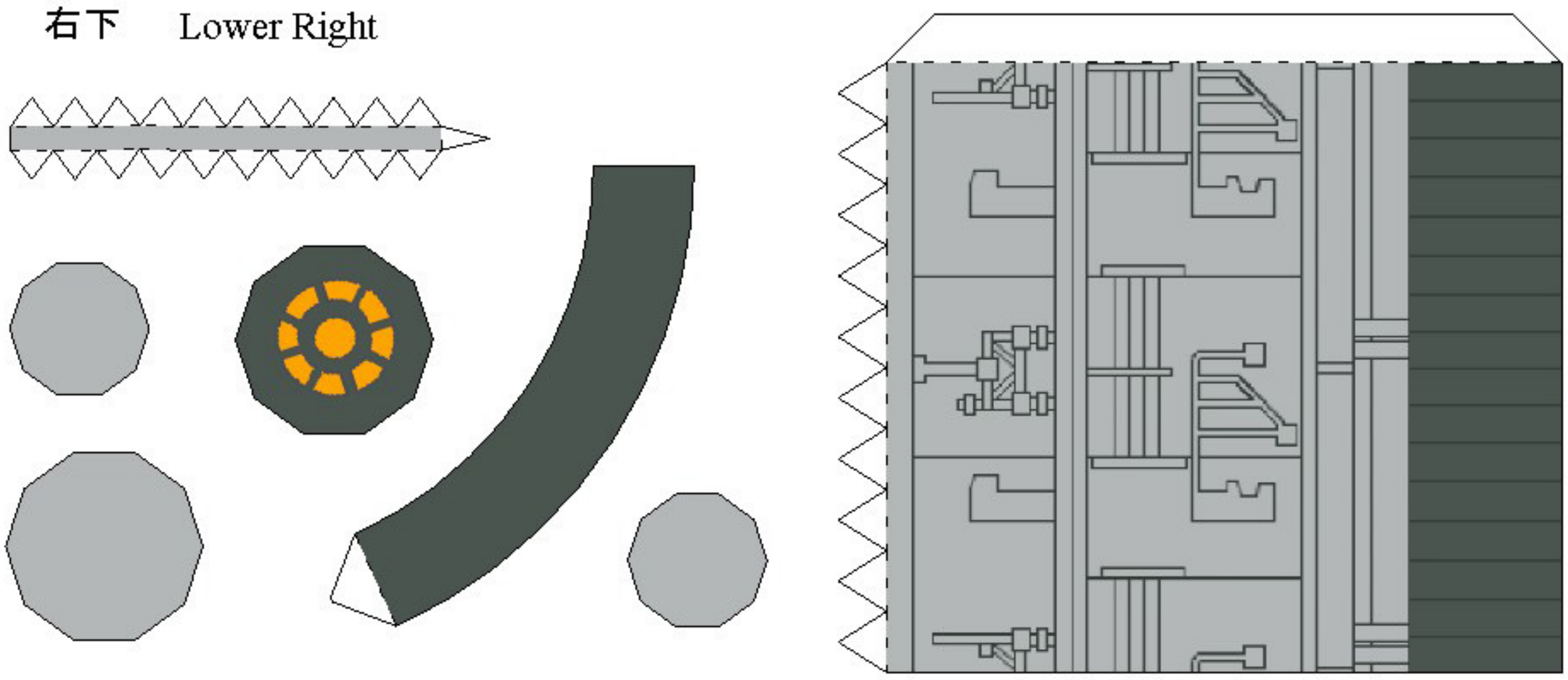
右下　Lower Right