Paper Model World

by Takahiro Kojima , Japan

http://member.nifty.ne.jp/papermodel/

Japanese ROCKET H-IIA

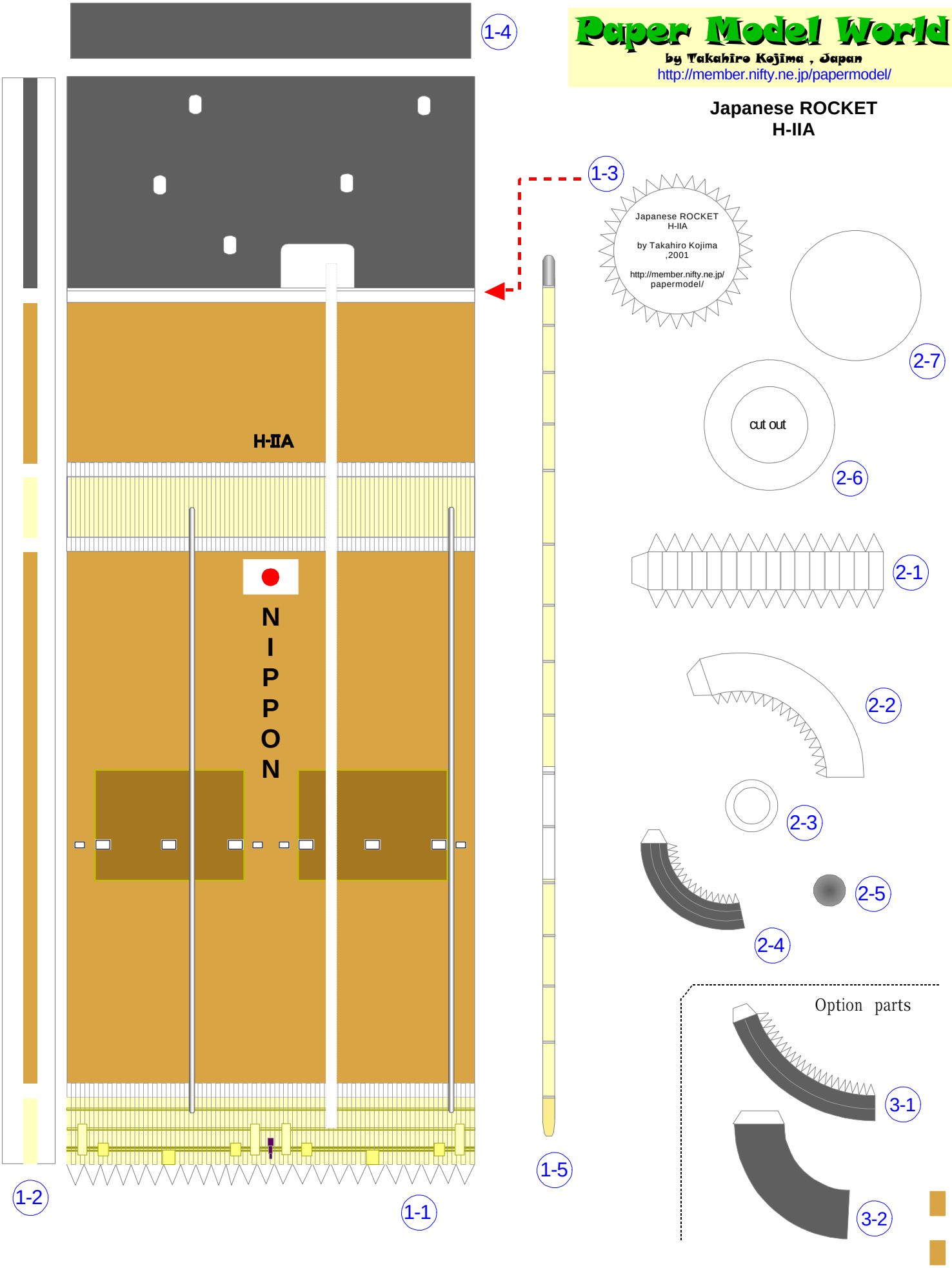

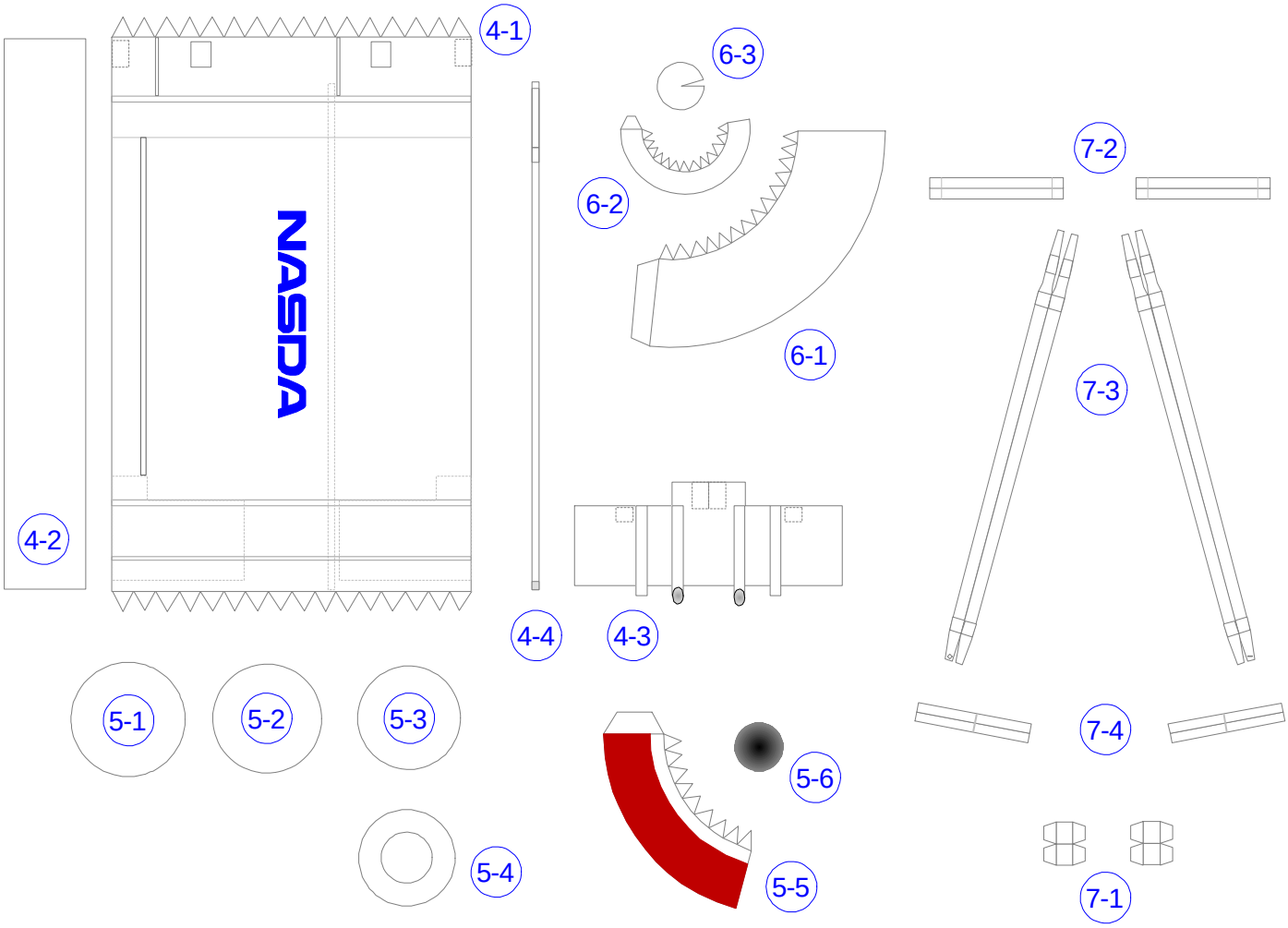
4-1
6-3
7-2
6-2
6-1
7-3
4-2
4-4
4-3
5-1
5-2
5-3
7-4
5-6
5-4
5-5
7-1

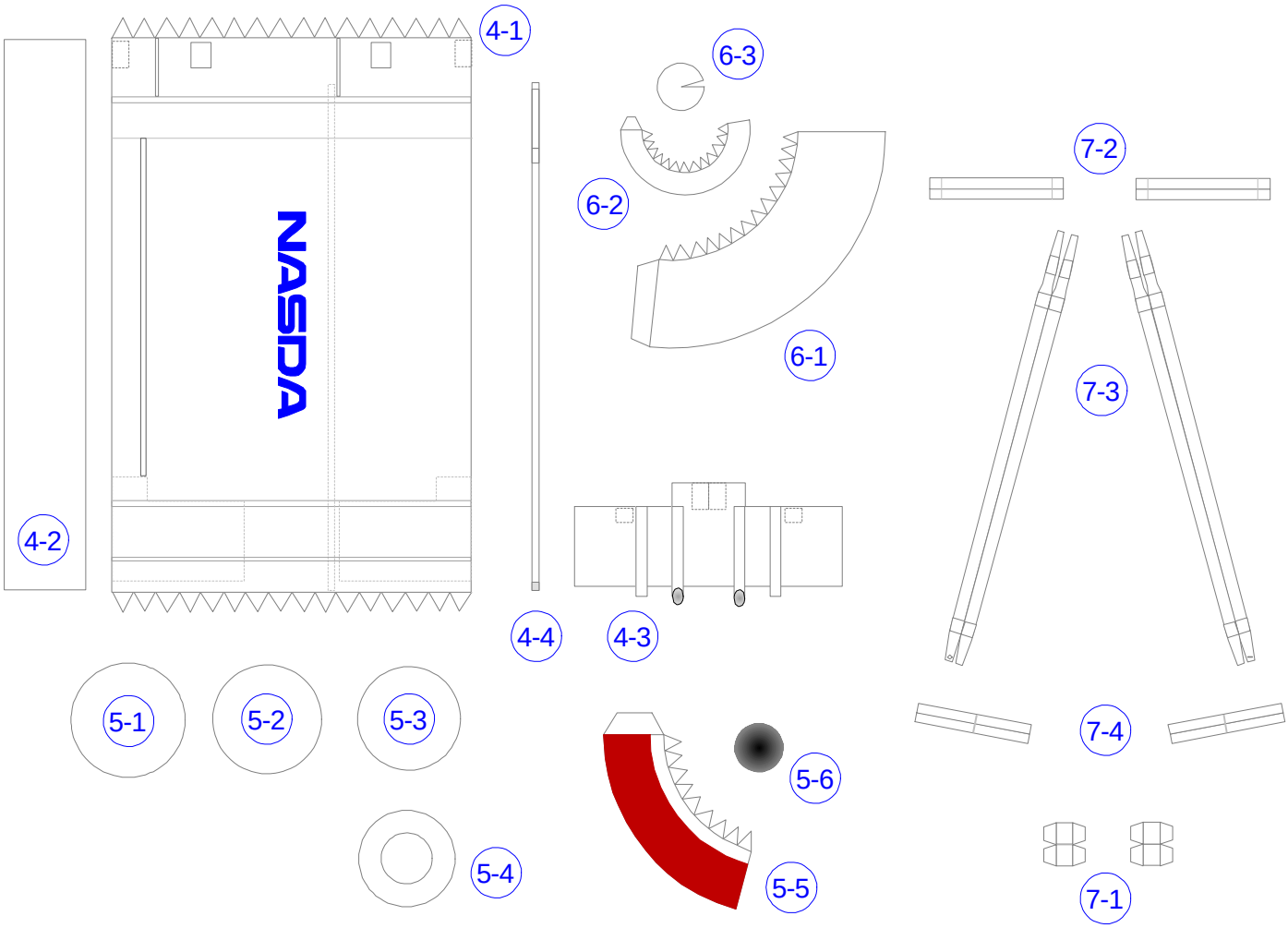
4-1
6-3
7-2
6-2
6-1
7-3
4-2
4-4
4-3
5-1
5-2
5-3
7-4
5-6
5-4
5-5
7-1

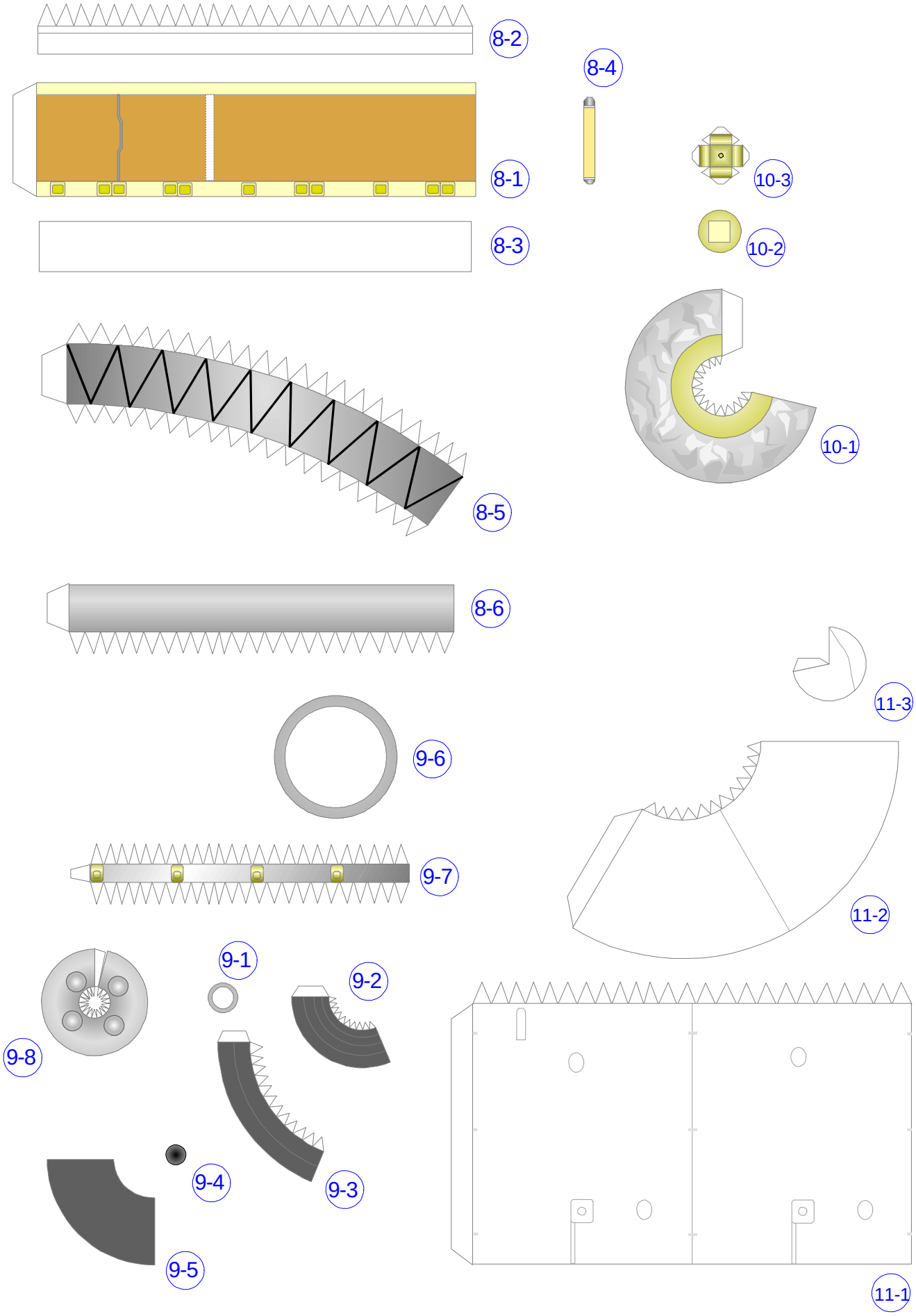
8-2
8-4
8-1
10-3
8-3
10-2
10-1
8-5
8-6
11-3
9-6
9-7
11-2
9-1
9-2
9-8
9-4
9-3
9-5
11-1

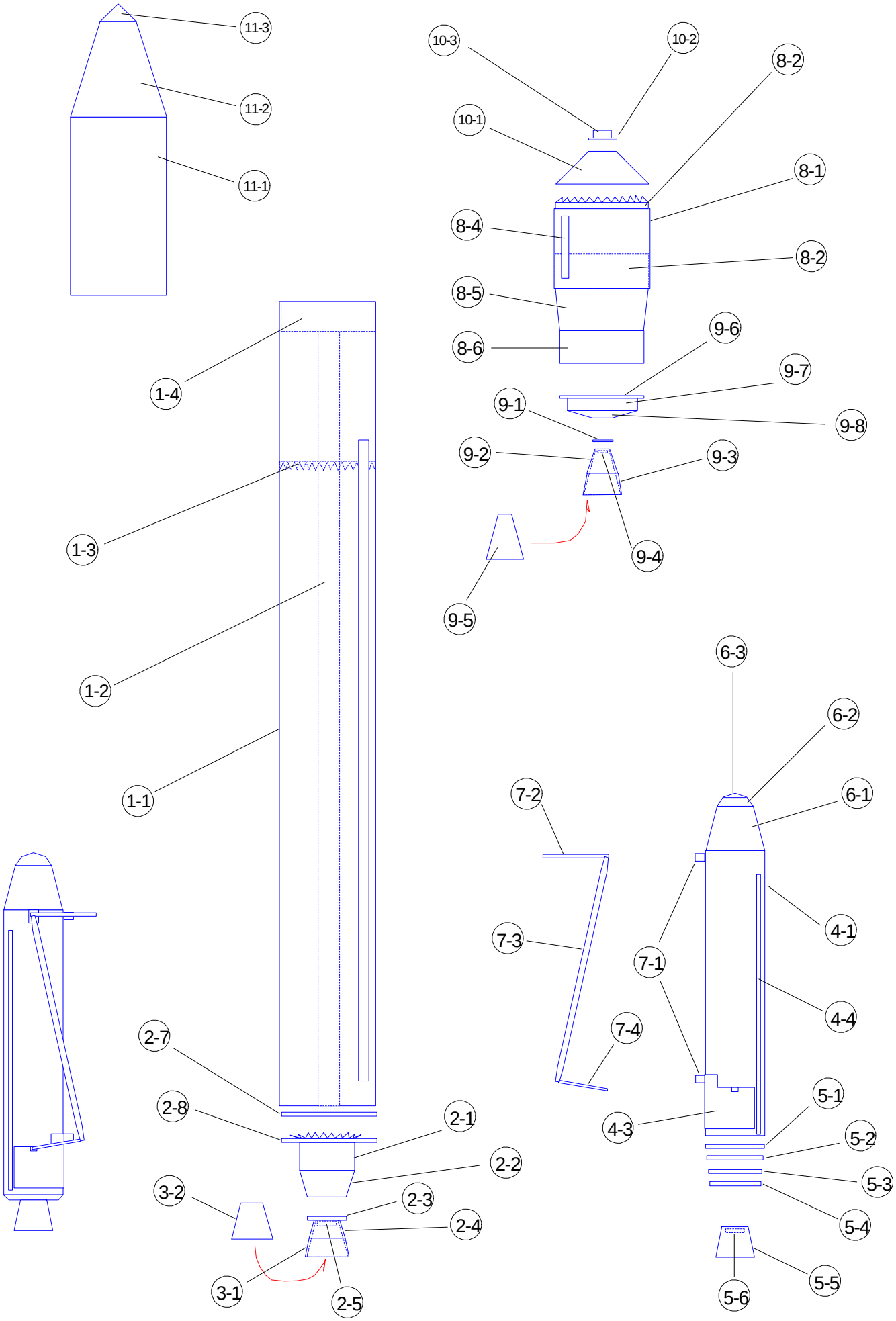
11-3
11-2
11-1
10-3
10-2
8-2
10-1
8-1
8-4
8-2
8-5
8-6
9-6
9-7
9-1
9-8
9-2
9-3
9-4
9-5
1-4
1-3
1-2
1-1
6-3
6-2
6-1
7-2
7-3
7-1
4-1
4-4
7-4
2-7
2-8
2-1
2-2
4-3
5-1
5-2
5-3
5-4
3-2
2-3
2-4
3-1
2-5
5-5
5-6