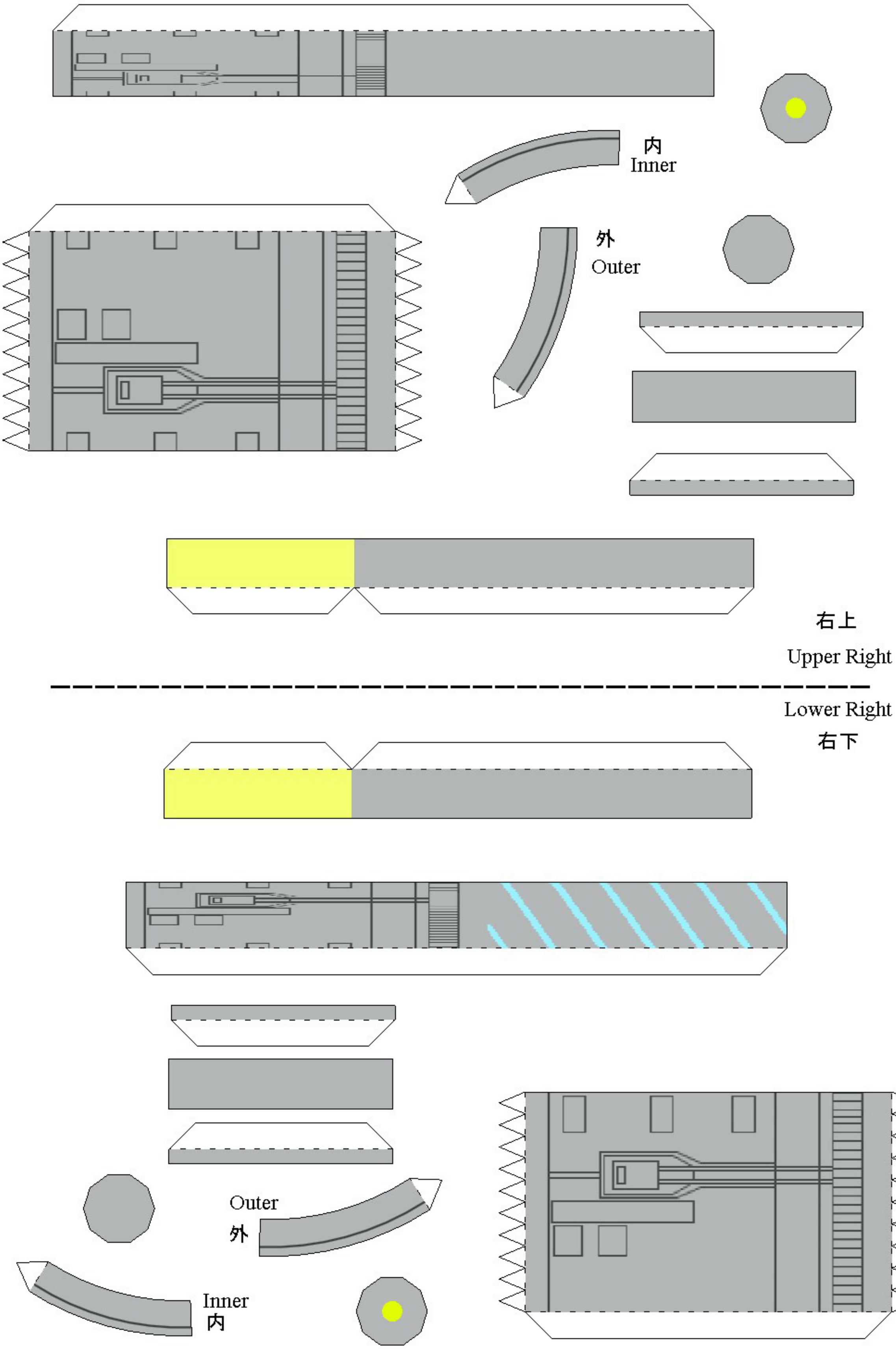

Designed by Tetsuji MORITA